Operation & Instructions

FOR THE USE OF YOUR

SUNDASH

Wolff System

Indoor Tanning Systems

SUNDASH R-40SS

Sun Industries, Inc.
P.O. Box 2026
Jonesboro, AR 72402
1-800-643-0086

007223

Specifications

R-40SS

LENGTH: 85"

WIDTH: 45"

HEIGHT: 34.5"- 52"

SHIPPING WEIGHT: 800 LBS.

NO. OF LAMPS: 40

ELECTRICAL: 27 AMPS @ 240 VOLTS
CIRCUIT REQUIRED: 120/240 V, 2-POLE, 40 AMP BREAKER

DANGER - ULTRAVIOLET RADIATION. FOLLOW INSTRUCTIONS. AVOID OVEREXPOSURE. AS WITH NATURAL SUNLIGHT, OVEREXPOSURE CAN CAUSE EYE AND SKIN INJURY AND ALLERGIC REACTIONS. REPEATED EXPOSURE MAY CAUSE PREMATURE AGING OF THE SKIN AND SKIN CANCER. **WEAR PROTECTIVE EYEWEAR; FAILURE TO MAY RESULT IN SEVERE BURNS OR LONG-TERM INJURY TO EYES.**

MEDICATIONS OR COSMETICS MAY INCREASE YOUR SENSITIVITY TO THE ULTRAVIOLET RADIATION. CONSULT PHYSICIAN BEFORE USING SUNLAMP IF YOU ARE USING MEDICATIONS OR HAVE A HISTORY OF SKIN PROBLEMS OR BELIEVE YOURSELF ESPECIALLY SENSITIVE TO SUNLIGHT. IF YOU DO NOT TAN IN THE SUN, YOU ARE UNLIKELY TO TAN FROM THE USE OF THIS PRODUCT.

THIS UNIT UTILIZES UVA LAMPS. REPLACE TOP UNIT ONLY WITH **BELLARIUM SR RA1-12-160W**. REPLACE BOTTOM UNIT ONLY WITH **EUROSUN S3 ES3-73-100W**.

LIE ON ACRYLIC SURFACE AND LOWER TOP SECTION. TOP SECTION WILL STOP AT 12 INCHES (305 MM) FROM BOTTOM ACRYLIC SURFACE. THE USE OF ANY OTHER POSITION MAY RESULT IN OVEREXPOSURE.

RECOMMENDED EXPOSURE SCHEDULE

SKIN TYPE	WEEK 1 1ST-3RD TREATMENTS	WEEK 2 4TH-6TH TREATMENTS	WEEK 3 7TH-10TH TREATMENTS	WEEK 4 11TH-15TH TREATMENTS	WEEKLY SUBSEQUENT TREATMENTS
II - FAIR	3 MIN.	7 MIN.	15 MIN.	20 MIN.	20 MIN.
III - AVERAGE	3 MIN.	7 MIN.	15 MIN.	20 MIN.	20 MIN.
IV - BROWN	3 MIN.	10 MIN.	15 MIN.	20 MIN.	20 MIN.
V - DARK BROWN	3 MIN.	10 MIN.	15 MIN.	20 MIN.	20 MIN.

MAXIMUM EXPOSURE TIME IS 20 MINUTES.
TANNING CAN BEGIN ON A REGULAR BASIS. AN APPEARANCE OF TANNING NORMALLY APPEARS AFTER A FEW EXPOSURES AND MAXIMIZES AFTER FOUR (4) WEEKS OF EXPOSURE FOLLOWING THE RECOMMENDED SCHEDULE FOR YOUR SKIN TYPE.

USE PROTECTIVE EYEWEAR, SUPER SUNNIES, WHENEVER THE EQUIPMENT IS ENERGIZED. READ THE INSTRUCTION BOOKLET BEFORE USING THIS UNIT.

INSTRUCTIONS ACCOMPANYING THIS PRODUCT SHOULD ALWAYS BE FOLLOWED TO AVOID OR MINIMIZE POTENTIAL INJURY.

"THIS PRODUCT IS IN CONFORMITY WITH PERFORMANCE STANDARDS FOR SUNLAMPS PRODUCTS UNDER CFR PART 1040."

Warnings and Cautions

Certain drugs - particularly those that produce photosensitivity - may cause individuals under the influence of this type drug to experience adverse effects and those people should avoid exposure to UV sources of all kinds. Doctors will advise persons taking these drugs of possible adverse effects.

It is recommended that only one person at a time should use the tanning system while in use, and advises using protective eyewear while taking a tanning session. One pair of goggles is provided with each sunbed sold.

WARNING

If you have been diagnosed by a physician as being allergic to the sun or are currently taking photosensitive medications, consult your physician before using the tanning unit.

Occasionally, persons using the tanning system will experience a slight reddening of the skin - usually in small patches - after the second or third session. This redness is often accompanied by an itching sensation. This may be nothing more than a heat "rash" caused by heat from the lamps within the system. It is generally very limited and caused by constant contact of the skin with the acrylic surface. It should go away within approximately 24 hours and should not reappear. This "rash" can be lessened or prevented by turning over occasionally during sessions on tanning unit, and by applying moisturizer lotion to the affected area after the tanning session is completed.

CAUTION

While there is no immediate clinical evidence regarding UVA exposure and its effects upon **expectant mothers,** it is strongly advised that expectant mothers be discouraged from using the tanning unit.

Mandatory Reading

Always read and follow all instructions for proper usage prior to using any tanning system.

Remember:

1. Follow the exposure schedule in accordance with your skin type. Failure to do so may result in overexposure.

2. A tanning system is not a toy. You cannot vary the strength of the lamps in your unit.

Should you have any questions regarding the proper use of your tanning system, contact Sun Industries at:

1-800-445-0624
8:00 a.m. to 5:00 p.m. (CST)

Thank you for your cooperation.

Care and Cleaning of Your Tanning Unit

After each session is completed, spray the acrylic surface with **SUNDASH Acrylic Cleaner**, a specially formulated UVT (ultra-violet transmitting) acrylic cleaner. Wipe the surface of the acrylics with a clean cloth. The acrylic should never be wiped with a dry cloth because this will generate a slight static charge which will attract dust. A mild liquid detergent and water solution can be used temporarily in place of **SUNDASH Acrylic Cleaner**.

For maximum efficiency of your tanning unit, periodic cleaning of lamps, reflectors and the inside of the acrylics is required. Refer to relamping instructions for acrylic removal.

CAUTION: Do not use excessive amounts of water, any abrasive cleaners, or any spray cleaner that carry label warnings regarding reactions to contact with skin!

DO NOT USE ALCOHOL.

Electrical Safety:

The tanning unit should be disconnected from the power supply before cleaning or disinfecting the inside of the acrylic. Avoid water or solution entering the lamp compartment.

Relamping Instructions

R-40SS

1. Disconnect power from unit.

2. To remove acrylic from bottom unit, locate the six (6) 1/4 turn fasteners on the front rail. Using a flat head screwdriver turn each fastner a 1/4 turn counter clockwise. You should hear the fastner snap to release the strip. Repeat procedure on all six fastners. Remove the acrylic retainer strip. NOTE: The 1/4 turn fastner should remain attached to acrylic retainer strip

3. Lift the front edge of the acrilic approximately two (2) inches and slide acrylic forward.

4. Push lamp toward footend of the unit to disengage lamp from stationary lampholder. Remove lamp. Repeat procedure for remaining nineteen (19) lamps.

5. Clean and replace acrylic sheet. To install acrylic, slide the entire length of the rear edge of the acrylic into the groove between the back rail and the acrylic retainer strip. Flush the acrylic with the groove in the front rail, and secure with the front acrylic retainer strip. To attach the acrylic retainer strip, align all six fastners in the strip with the six holes in the rail. Secure strip using a flathead screwdriver. Turn each fastner clockwise 1/4 turn. You should hear the fastner snap to secure the strip. Repeat procedure on all six (6) fastners.

6. Repeat steps 2 through 5 on Top Unit.

7. Reconnect unit to power.

NOTE: Refer to Care and Cleaning Instructions for information and recomended cleaners for acrylic.

CAUTION:

Replacement lamps must comply with CFR21 1040.20.

A. Replace TOP UNIT only with "Bellarium SR RA1-12-160W"

B. Replace BOTTOM UNIT only with "Eurosun S3 ES3-73-100W"

C. When ordering lamps, include model number and serial number.

Exposure Time And Frequencies

Melanin - The brownish pigment produced by special cells in the base layer of your skin determines the individual's tan. As the skin is exposed to the ultraviolet light, the melanin is activated and combines with protein cells that rise to the skin's surface, thus producing a tan.

The amount of melanin in your body determines how quickly and dark you tan. The more melanin produced and exposure time an individual has, the faster and deeper the individual will tan.

NOTE

The tan produced by the tanning unit is a deep, rich "COSMETIC" tan. However, regardless of how dark an individual may tan on this system, it will not provide adequate protection against overexposure to natural sunlight or UVB tanning systems.

SKIN TYPE II - This is the individual that usually burns easily and severely, tans minimally or lightly and peels.

SKIN TYPE III - Often referred to as "AVERAGE" complexion, burns moderately and tans about average.

SKIN TYPE IV - This individual burns minimally, tans easily and above average with each exposure.

SKIN TYPE V - This individual's system rarely burns, tans easily and substantially.

RECOMMENDED EXPOSURE SCHEDULE

SKIN TYPE	WEEK 1 1ST-3RD TREATMENTS	WEEK 2 4TH-6TH TREATMENTS	WEEK 3 7TH-10TH TREATMENTS	WEEK 4 11TH-15TH TREATMENTS	WEEKLY SUBSEQUENT TREATMENTS
II - FAIR	3 MIN.	7 MIN.	15 MIN.	20 MIN.	20 MIN.
III - AVERAGE	3 MIN.	7 MIN.	15 MIN.	20 MIN.	20 MIN.
IV - BROWN	3 MIN.	10 MIN.	15 MIN.	20 MIN.	20 MIN.
V - DARK BROWN	3 MIN.	10 MIN.	15 MIN.	20 MIN.	20 MIN.

No two individual skin tones are the same. A tan to one person may be different to another and treatment length may vary.

MAXIMUM EXPOSURE TIME IS 20 MINUTES.

NOTE

If the tanner lies stationary, the stomach and back area will receive the majority of the tanning rays. Therefore it is recommended that an equal portion of the tanning session be devoted towards each side of the body. Thus insuring an even, full-bodied tan.

Since your tanning unit will cast off some heat, it is recommended that a small fan be used to improve air circulation during sessions. Likewise, adequate **ventilation** of the room or booth housing the tanning units is required for comfortable operation.

It is recommended that you do not use any creams, oils or lotions, (particularly suntan lotions) that are not recommended by Sun Industries, Inc. Equally important - many facial makeups have oil bases and should be removed prior to a session. It is recommended that, following a tanning session, a skin moisturizer be applied. This promotes a smoother, more even looking tan.

NOTE: Check to insure that the serial numbers on the outside of the boxes match before assembling. Remove packaging and ballast trays from carton marked **BALLAST BOX**. Remove packing and leg assemblies from carton marked **LEG ASSEMBLIES**.

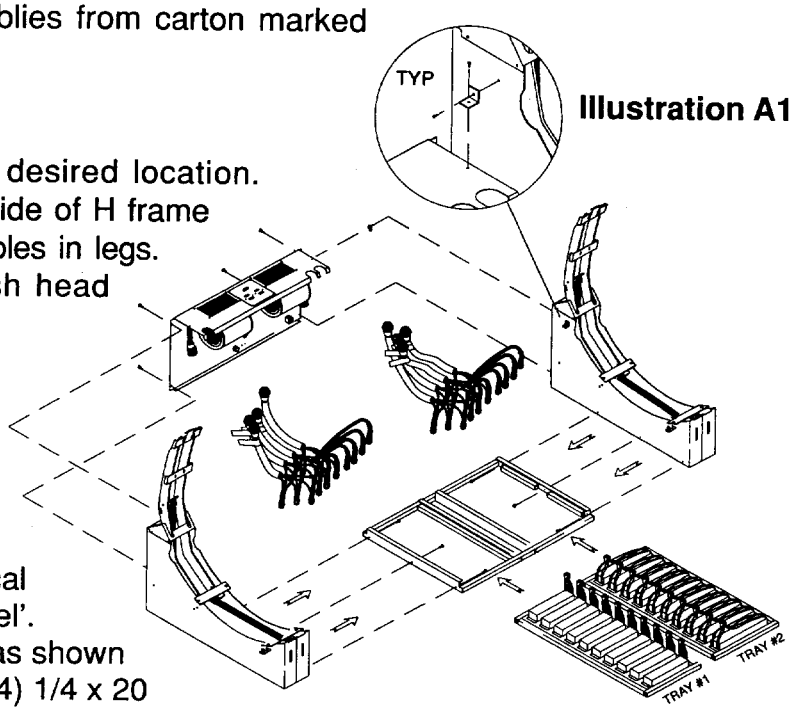

Illustration A1

Step 1
Place ballast tray H in room in desired location. Place right and left leg on each side of H frame attachment. Holes line up with holes in legs. Attach with six (6) 1/4 x 20 thrush head bolts. Refer to illustration A1.

Step 2
Slide ballast trays into H frame as shown in illustration A1.

Step 3
Remove packing and back electrical panel from box marked 'Back Panel'. Place panel accross back of legs as shown in Illustration A1. Attach with four (4) 1/4 x 20 thrush head bolts.

Step 4
Remove packing and unit from carton marked TOP UNIT. Lift top unit into position, (acrylic facing down), so that bolts protruding out of back panel align through slots on mounting bracket of leg assembly. (See Illustration A2).

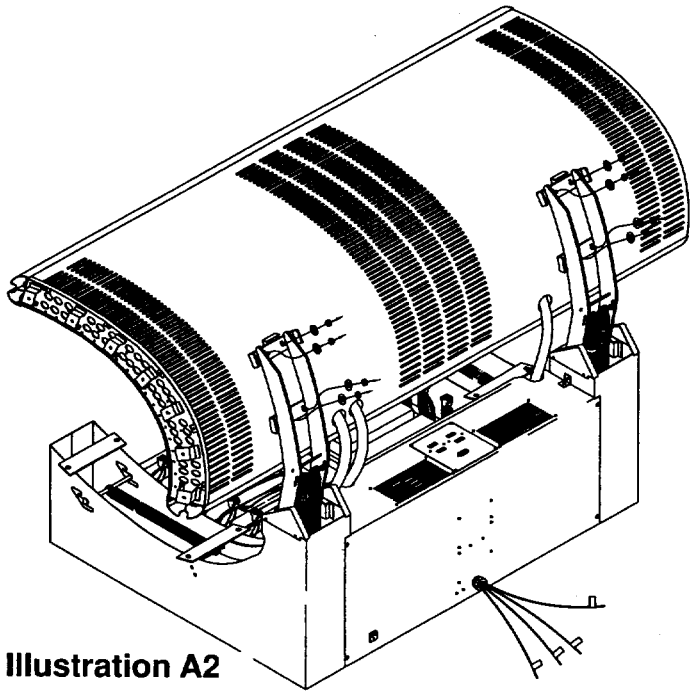

Illustration A2

Step 5
Attach top unit to leg assemblies using the eight (8) 5/16" nylock nuts and washers previously removed. Top unit must be secured tightly against the bottom position of the slots in the hinge mounting brackets.
(See Illustration A2).

Step 6
TOP UNIT POWER CONNECTION-
Locate power cord No. 4 align with receptacle labeled No. 4, and twist clockwise until locked.
(See Illustration A3).
Repeat procedure for cable No. 5 and 6.

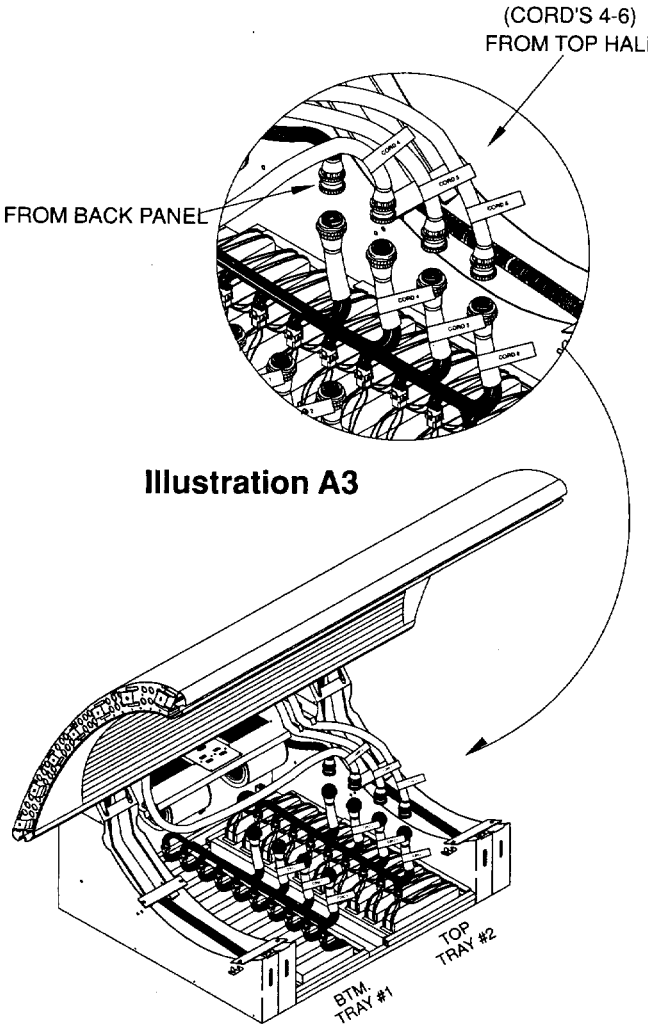

Illustration A3

Step 7
Remove packing and unit from carton marked bottom unit. Locate four (4) 1/4" nuts and washers from parts package.

Step 8
Lift bottom unit into position over leg assemblies. Lower unit slowly and align studs that protrude from back panel with mounting holes in leg assemblies.
(See Illustration A4).

Step 9
Secure bottom unit to leg assemblies with four (4) 1/4" nuts and washers
(See Illustration A5).

Step 10
BOTTOM UNIT POWER CONNECTION
Locate power cord No.1 align with receptacle labeled No.1, and twist clockwise until locked.
(See Illustration A5).
Repeat procedure for cable No. 2 and 3.

NOTE: Insure that pins in cord are aligned properly, **DO NOT FORCE INTO PLACE.** Also, insure cord is installed in proper receptacle.

Illustration A4

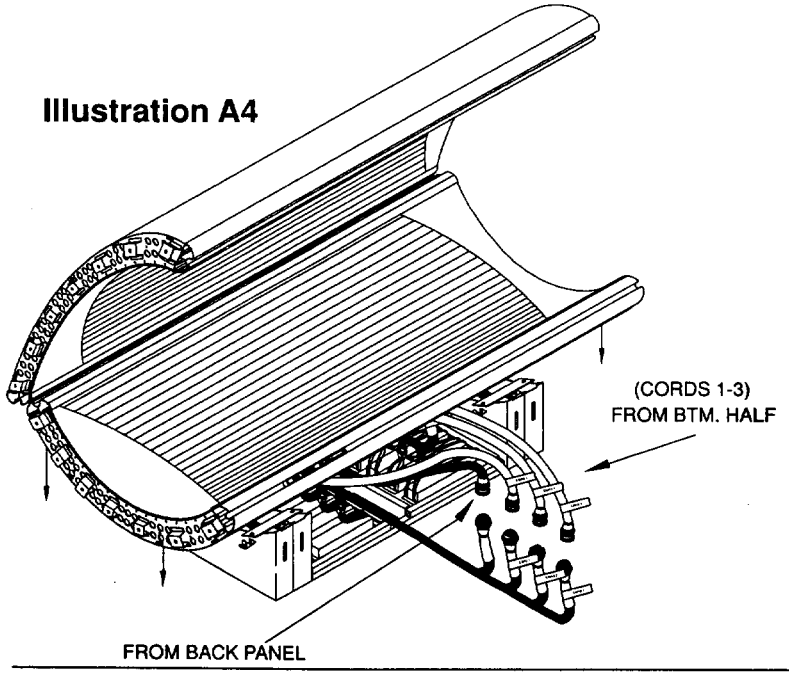

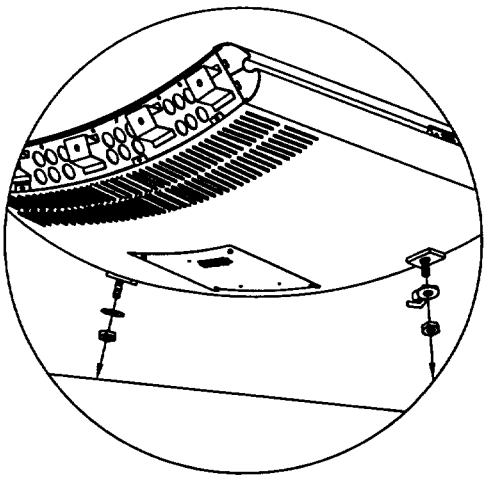

Illustration A5

Step 11

Locate and install hinge/fan cover by aligning the cover directly over the hinge brackets. (See Illustration A6).

Step 12

Locate ballast drawer concealment panel. Align the hanging tabs on the panel with the slots in legs and attach with two (2) #6 screws provided.
(See Illustration A6).

Step 13

ENDCAP INSTALLATION:

After assembly, locate the four (4) endcaps and twenty-eight (28) 1/4" thrush head machine screws. Align each end cap with the matching end of unit and attach with seven (7) screws.
(See Illustration A7).

Illustration A6

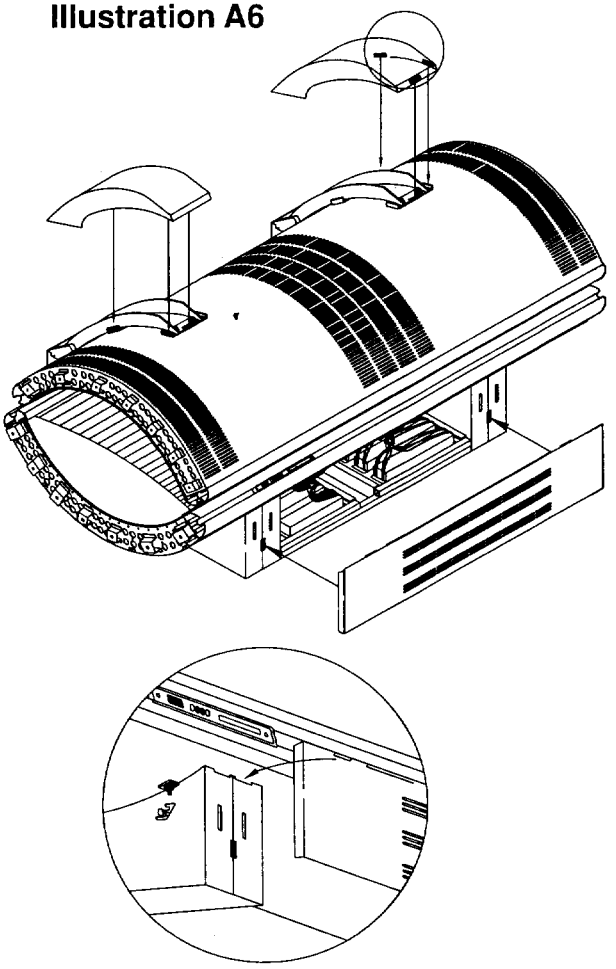

Note: To insure alignment of all screws, do not tighten until all screws have been threaded in attachment holes.

Illustration A7

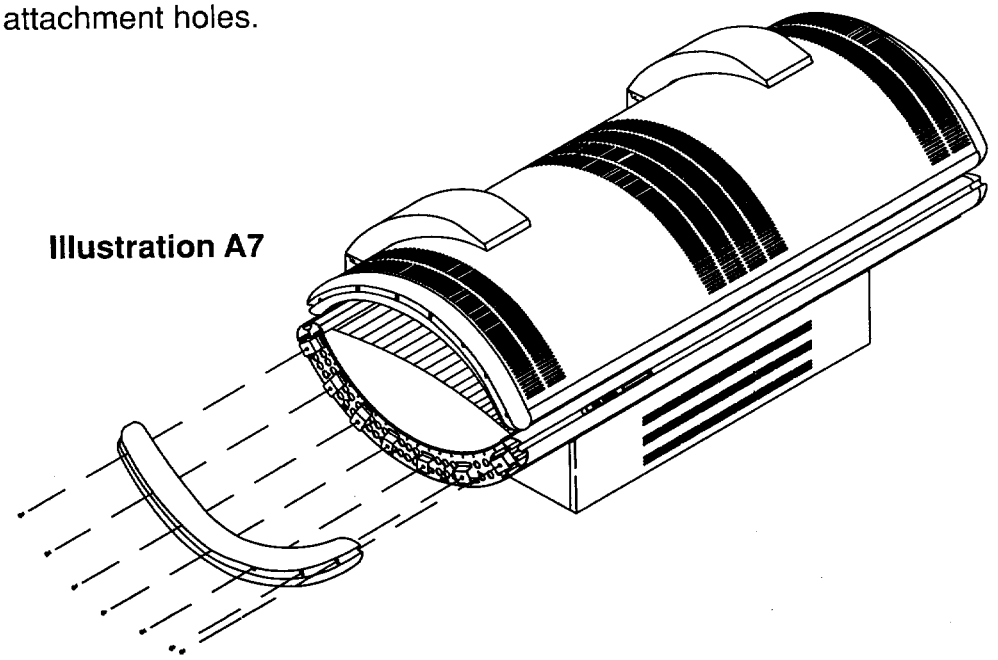

NOTE: Adjust only one leg assembly at a time.

Step 1
Remove ballast concealment panel, this will expose the spring adjustment slots located in the front of each leg. Lift top unit to full upright position and hold.

Step 2
Insert the spring adjustment tool. in the slots in the front of leg. Latch tool securely to the spring attachment rod and pull forward. Move the spring to the top slot in leg to increase lift and place spring to the bottom slot to decrease lift.

Step 3
Test adjustment by slowly opening and closing top canopy. Unit should operate smoothly.

Step 4
Repeat procedure on opposite leg if needed.

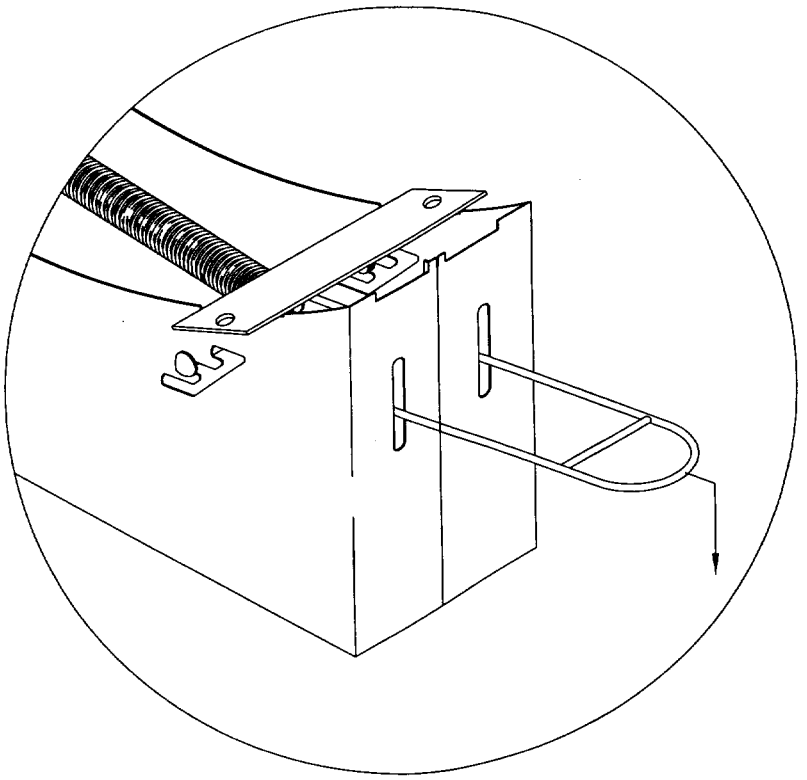

Unit Connection

R-40SS

Unit Connection: This unit must be connected to a 120/240 Volt, 40 amp service by the means of 3/4" flexible conduit connection. **Contact your local electrician.**

Note: Leave sufficient slack in conduit to allow ballast drawer to slide out fully. Approximately 3 additional feet required.

Wiring Diagram

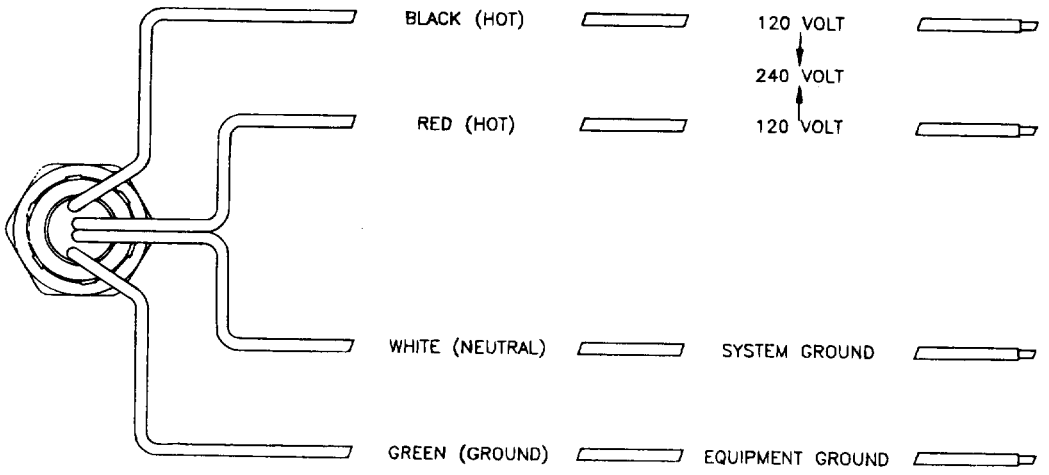

CIRCUIT REQUIRED

120/240 VOLTS 1Ø 40 AMP
3/4" FLEXIBLE CONDUIT CONNECTION

120/208 VOLTS 1Ø 40 AMP
3/4" FLEXIBLE CONDUIT CONNECTION

ALL FOUR (4) POWER WIRES
8 GA. OR LARGER

Intellitan Plus by Sun Industries, Inc.

Operating Instructions

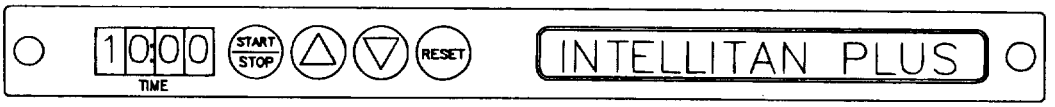

To Set Time

STEP 1: Press ▲ to reach desired setting, in minutes.

STEP 2: Press Start Stop to begin operation. The session is counted down in minutes and seconds.

NOTE: If a session delay is preprogrammed (P04), the display will begin to flash. The display will continue to flash as the time counts down according to the programming. The countdown is not visually displayed on the timer but is reported to the control device (CCS-1, IPI, Console, etc.) if connected. At **one (1) minute** before that start of the tanning session, an audible beep will sound (if programmed in P02), another will sound at **thirty (30) seconds** before the start of the tanning session. At **ten (10) seconds** the beep will sound and continue once each second until tanning unit lights. The tanning unit can be started before the expiration of the session delay simply by pressing Start Stop.

To Stop Unit

STEP 1: Press Start Stop anytime during a session. This will stop the countdown and hold time. To restart the unit simply press Start Stop again.

NOTE: If a session delay is preprogrammed (P04) Press Start Stop twice to restart the unit.

To Clear Time

STEP 1: Press Reset, the timer clears to read 00:00.

NOTE: If the unit is counting down, Start/Stop button must be pressed before resetting.

To Change Parameters

To enter the System's data bank, monitor operations and verify the vital functions concerning your unit, use the following step-by-step instructions.

Enter Password Clearance

P01 Press ▲ and ▼ at the same time and hold in for one (1) second, then release. The colon will disappear and the display now reads 0000. Press Reset once and release. The four (4) zeros (0000) will now flash. Press ▲ and hold down until the timer display scrolls up to 0010 (for level 1 or view password) or 0102 (for level 2 or edit password) then release the button.

Now press Reset once and release. The display will stop flashing and read 0001 if level 1 was selected or 0002 if level 2 was selected. System is now in **Parameter Mode.** To edit the parameters, be sure to use the above instructions and use the level 2 (EDIT) password 0102 instead of the level 1 (0010). Keep all passwords in a safe place to prevent misuse.

Important Note:

Proceed slowly through viewing and editing of various parameters. You **cannot** view parameters in reverse order. That is, you **cannot** go for Parameter 7 to Parameter 6. If you proceed too quickly or inadvertently pass by the parameter you wish to view/edit, you must exit the system, (press **Start/Stop** button until you reach 00:00) then re-enter password clearance to get back into system.

To view the current parameter that you are in, simply press the down button. Parameter will be immediately displayed. You cannot check parameter if display is flashing.

In network mode (when the tanning unit is connected to a series of other units) all keys except the Start/Stop key is locked to prevent unauthorized use. Before changing any parameters the tanning unit must be disconnected from the timer network for at least 30 seconds before the keys will unlock. Be sure to reconnect the timer network after completing any programming.

Now press Start/Stop once to reach **Parameter 2, (P 02)**, the **Alarm Enable/Disable** function.

P02 Parameter 2 is the chime mechanism that provides an audible 'beep' sound when the keys are depressed and to indicate the various operations occurring. The audible beep can be enabled or disabled.. The unit comes with the chime mechanism enabled to provide an audible beep.

When parameter 02 is shown, the display will read 0001. To maintain the chime mechanism,

press the Start/Stop new and go to **P03**. To silence it, do the following:

To Change Parameter 2, Alarm Enable/Disable

Press Reset once then release it. The display will begin to flash. Press ▼ and hold it down, scrolling down to 0000. Now press Reset once again. The chime is now deactivated. To reactivate the chime, change parameter 02 back to 0001 using the same instructions provided above.

Now press Start/Stop to reach **Parameter 3, (P03)**, the **Fan Delay** or Post Session Cooling

P03

Parameter 3 is the fan delay. The fan delay maintains proper cooling of the tanning unit by continuing to provide power to the cooling fans for a programmable amount of time after the tanning session has completed. The unit comes with the fan delay preprogrammed at one (1) minute. Certain salon conditions may warrant a higher fan delay to maintain proper cooling. The fan delay cannot be disabled.

When parameter 03 is shown, the display will read 1.0 for one minute. To change the fan delay, do the following:

To Change Parameter 3, Fan Delay

Press Reset once then release it, the display will begin to flash. Now press either ▲ or ▼ to reach desired setting. Time is displayed from 1.0 to 3.0, with decimal representing **tenths** of a minute. For Example: 1.5 equals 1 minute, 30 seconds. After setting the fan delay press Reset once then release it. The fan is now set.

Important Note about the Fan Delay

Time is not displayed on the timer during the fan delay. Time is, however, displayed on the CCS-1 or other control device during the fan delay to indicate how long the fan delay has remaining. When displayed on the CCS-1 or other control device the time counts down in three second increments.

When the Intellitan Plus timer is on a network no new time can be placed on the timer until after the fan delay has expired. The fan delay can not be disabled.

Now press Start/Stop to reach **Parameter 4, (P04)**, the **Session Delay, Prep-Time Monitor** function.

P04

Parameter 4 is the session delay. The session delay allows a programmable amount of time at the beginning of a session to get ready for the tanning session. The tanning session time shown on the timer flashes during the session delay. The unit comes with no session delay preprogrammed.

To Change Parameter 4, Session Delay

When Parameter 04 is shown, the display will read 0.0 for no session delay. To change the session delay, do the following:

Press (Reset) once then release it. the display will begin to flash. Now press (▲) or (▼) to reach desired setting. Time is displayed from 0.0 to 5.0, with the decimal representing **tenths** of a minute. For Example: 2.5 equals 2 minutes, 30 seconds. After reaching desired setting, press (Reset) once and release it. Session delay is now set.

Now press (Start/Stop) to reach **Parameter 5, (P05)**, the **Station Address** function.

P05

Parameter 5 is the station address. The station address allows the tanning unit to be identified for interface with the CCS-1, the 1-10 unit console timer, the Intellitan Single Station Console, and the IPI, the Intellitan Protocol Interface for your computer system. The unit comes with a station address of 1 preprogrammed.

To Change Parameter 5, Station Address

When parameter 05 is shown, the display will read 0001 for station address one. To change the station address, do the following:

Press (Reset) once and release it, the display will begin to flash. Now press (▲) or (▼) to reach desired address setting. Once the desired setting is reached, press (Reset) once and release it. The station address is now set.

Now press (Start/Stop) to reach **Parameter 6, (P06),** the **Lamp-Hour Accumulation on Current Lamp Bank** function.

P06

Parameter 6 is the lamp hour accumulation counter. The lamp hour accumulation counter keeps track of the number of hours on the current lamp bank. This is a resetable parameter that should be reset to 0 when the lamps are changed. When current lamp hour accumulation reaches 1000, a beep will chime each time the unit is turned on, indicating that a lamp change is necessary.

Chime will not sound if it has been disabled through parameter 2.

When parameter 06 is shown, the display will read from 0000 to 9999. To clear the lamp hour accumulator, do the following:

To Clear Parameter 6, Lamp Hour Accumulation

Press (Reset) once and release, the display will begin to flash. Now press and hold (▼) until 0000 is displayed. When the display reads 0000 press (Reset) once and release. Lamp hour accumulation is now cleared.

Now press (Start/Stop) once and release it to reach **Parameter 7, (P07)**, to measure **A/C Voltage Phase A.**

P07 Parameter 7 is the measurement of A/C voltage on phase A. The A/C voltage will be immediately displayed from 0000 to 0200 volts, with 0120 as the nominal reading. To update the display and take another voltage reading press (▼) once and release.

Now press (Start/Stop) once and release it to reach **Parameter 8, (P08)**, to measure **A/C Voltage Phase B.**

P08 Parameter 8 is the measurement of the A/C voltage on phase B. The A/C voltage will be immediately displayed from 0000 to 0200 volts, with 0120 as the nominal reading. To update the display and take another voltage reading press (▼) once and release.

Now press (Start/Stop) and release it to reach **Parameter 9, (P09)**, to measure the **Average Voltage on Phase A**

P09 Parameter 9 is the measurement of average A/C voltage on Phase A for the previous session, or current session if unit is energized. The reading is immediately displayed.

Now press (Start/Stop) and release it to reach **Parameter 10, (P10)** for measuring the average voltage on **Phase B**

P10 Parameter 10 is the measurement of average A/C voltage on Phase B for the previous session, or current session if the unit is energized. The reading is immediately displayed.

Now press and release it to reach Parameter 11, (P11), the measurement of the unit's **Operating Temperature.**

P11 Parameter 11 is the measurement of the unit's internal operating temperature. The reading is immediately displayed. Measurement is in Fahrenheit. To update the display and take another temperature reading press once and release.

Now press and release it to reach Parameter 12, (P12), the measurement of the unit's **Ambient Temperature.**

P12 Parameter 12 is the measurement of the units ambient or room temperature. The reading is immediately displayed. Measurement is in Fahrenheit. To update the display and take another temperature reading press once and release.

Now press once and release it to reach **Parameter 13, (P13)**, the Measurement of the units Average Operating Temperature

P13 Parameter 13 is the measurement of the unit's average operating temperature during the previous session or current session if the unit is energized. The reading is immediately displayed. Measurement is in Fahrenheit. To update the display and take another temperature reading press once and release.

Now press once and release it to reach Parameter 14, (P14), the measurement of the Average Ambient Temperature.

P14 Parameter 14 is the measurement of the average ambient or room temperature during a previous session or current session if the unit is energized. The reading is immediately displayed. Measurement is in Fahrenheit. To update the display and take another temperature reading press once and release.

Now press (Start/Stop) once and release it to reach **Parameter 15, (P15)**, the Clean Room Feature.

P15 Parameter 15 is the clean room feature. When enabled, the clean room feature will show all dashes (----) on the timer display to show that the tanning unit needs to be cleaned. In network mode, no new time can be placed on the timer when the clean room indicator is displayed. The IPI will show that the room is "Dirty" and the CCS-1 will display DLY 00:00 to show to the front desk personnel that the room needs to be cleaned. To reset the clean room feature from the room indicating that the room has been cleaned, simply press the (Reset) twice in rapid succession. When the clean room feature is reset, the timer will display 00:00, the remote console will display "99" , the CCS-1 will display "Bed xx Available" and the IPI utility program will display "Ready." The unit comes with the clean room feature disabled.

To change Parameter 15, Clean Room Feature

Press (Reset) once then release it, the display will begin to flash. Now press (▲) once to display 0001, then press (Reset) once and release it. The Clean Room Feature is now enabled. To disable the Clean Room Feature simply change parameter 15 back to 0000.

Now press (Start/Stop) once and release it to reach **Parameter 16 (P16), The Econometer**

P16 Parameter 16 is the Econometer. The Econometer measures the electrical cost, to power unit for previous session or the current session if the tanning unit is active. The reading is displayed immediately. Measurement is in cents and tenths of a cent. This function is read only and can not be changed.

For Example-> A reading of 10.7 would equal 10.7 cents.

Now press (Start/Stop) once and release it to reach Parameter 17, (P17), Cost Per Session.

P17 Parameter 17 is the session cost per minute. This figure is automatically entered into the tanning unit's data bank in accordance with the National Average of **7.5¢** per kilowatt hour. The formula used is Unit_KwH_Draw X National_Average / 60_minutes = cost per minute. In the case of the R32B this is 3.1 x 7.5 / 60 = 0.388 rounded up to .4 cents per minute.

To change Parameter 17, Cost Per Minute

Press (Reset) once then release it, the display will begin to flash. Now press (▲) or (▼) until the desired cost per minute is displayed. Measurement in cents and tenths of a cent. For Example. A reading of .4 would equal for tenths of one cent. Once the desired reading is displayed press (Reset) once and release it. The Cost Per Minute is now set.

Now press (Start/Stop) once and release it to reach **Parameter 18, (P18), The Session Counter.**

P18 Parameter 18 is the session counter. The session counter displays the total number of times a session has been started since first day of operation. The session counter counts from 0000 to 9999 then rolls over. The session counter cannot be adjusted or reset.

Now press (Start/Stop) once and release it to reach **Parameter 19, (P19), Total Hour Accumulation.**

P19

Parameter 19 is the total hour accumulator. This accumulator displays the total number hours on the unit since first day of operation. The accumulator counts from 0000 to 9999 then rolls over. The total hour accumulator cannot be adjusted or reset.

Now exit parameter mode by pressing (Start/Stop) until the display reads 00:00. The remaining parameters are for future expansion and are not used at this time.

Your Tanning System can easily be adapted for front desk and/or remote operation. Contact Sun Industries or your factory representative for more information on the Intellitan Console, CCS-II or IPI computer interface.

General Troubleshooting Guide

The following troubleshooting information is divided into two sections. Section A contains items in which the owner may check without the aid of a service person. Section B contains items which must be performed by QUALIFIED SERVICE PERSONNEL ONLY. If you have any questions other than the ones listed in your troubleshooting guide, contact your dealer or distributor.

(NOTE: All tanning units are not the same, therefore some of the causes may not apply to your unit.)

General Troubleshooting (Section A)

1. Tanning unit does not operate.

CAUSE	SOLUTION
1. No power to unit.	1. Check circuit breaker servicing bed.
2. Timer is not activated.	2. Press up button, then start button.

(NOTE: If there is power to the unit but the display on the timer is not lighting, you may need to replace the power board and/or the C.P.U. board. Contact Sun Industries or your local representative for information.

2. Lamps won't light or lamps flicker.

CAUSE	SOLUTION
1. Lamp not seated properly in lampholder.	1. Remove lamp, inspect contacts on lamp, and reinstall lamp securely into lampholder.
2. Faulty lamp.	2. Replace lamp. (Refer to Instruction Manuel for correct lamp).

3. Top unit does not hold its position.

CAUSE	SOLUTION
1. Spring needs to be adjusted.	1. Refer to spring adjusting in your Operation and Instruction Manual.

General Troubleshooting (Section B)

All services in the following section are to be completed by a Qualified Service Technician. This section is to aid in isolating and correcting any problems which may occur and is not intended for use by the owner. Refer to the assembly instructions included with each unit for reference in disassembling and wiring the tanning unit. Disconnect all power to the unit before servicing. Use only factory authorized components for replacement parts.

1. Tanning unit does not operate.

CAUSE	SOLUTION
1. Incorrect connection of incoming power.	1. Check electrical connections on wiring diagram and correct as necessary.
2. Faulty timer.	2. Replace
3. Faulty relay in bed.	3. Replace
4. Poor wiring connections.	4. Check wiring circuit against appropriate wiring diagram and correct as required.

2. Lamps won't light.

CAUSE	SOLUTION
1. Poor wiring crimp at lampholder.	1. Check for loose wire and repair.
2. Faulty or damaged lampholder.	2. Replace.
3. Incoming power to unit incorrect.	3. Check incoming voltage and correct to requirements.
4. Faulty ballast.	4. Locate and replace.
5. Loose power wire to ballast.	5. Locate loose wire and repair.

	Part Number	Description
1.	042114	HINGE CVR R40
2.	003196	1/4 TURN 84-20-80-10
3.	011884	ACRY MTG STRIP R40
4.	035161	STA 2 R40 '97
5.	006000	CUSHION SUNDASH '95
6.	011889	LAMPCOVER TH/BF R40
7.	011888	LAMPCOVER TF/BH R40
8.	011320	ACRYLIC BRACE 71.875"
9.	011862	REFLECTOR BACK R40
10.	011860	REFLECTOR FRONT R40
11.	041095	REF/FAN ACCESS PANEL
12.	010422	LAMPCOVER BRKT
13.	021048	FANCORD ASSY 4POS
14.	002015	EUROSUN S ES3-73-100W
15.	002010	SOLARIUM VHR 72"
16.	002069	LAMPHOLDER TEL 1640.1
17.	011864	LAMPCHASIS BF R40
18.	011866	LAMPCHASIS TF R40E/VHR
19.	011863	LAMPCHASIS BH R40
20.	011865	LAMPCHASIS TH R40E/VHR
21.	002070	LAMPHOLDER STA 1640.2
22.	005011	CAUTION HV 3X2
23.	021503	BED CORD ASSY #3 R40
24.	021502	BED CORD ASSY #2 R40
25.	021501	BED CORD ASSY #1 R40
26.	021506	BED CORD ASSY #6 R40
27.	021505	BED CORD ASSY #5 R40
28.	021504	BED CORD ASSY #4 R40
29.	002388	BUSHING SB750-10
30.	011885	BOTTOM STA 1 R40
31.	011892	TOP STA 1 R40
32.	005203	WOLLF/SYS BLK/CLR (LAM)
33.	010685	BODYBOLOWER STAND (OPT)
34.	041011	BODYBLOWER WHITE (94-UP)
35.	005120	SUPER SUNDASH
36.	021416	ELEC, TIMER PWR BRD INTEL+ ASSY
37.	003704	ENDCAP R40

	Part Number	Description
38.	011368	TIMER ACCESS PANEL A/D
39.	005122	UV WARNING EURO/VHR (LAM)
40.	002598	FFC 12 CONDUCTOR 278387-1
41.	021415	TIMER DISPLAY INTEL+ ASSY
42.	005287	TIMER INTEL+ MEMBRANE
43.	005121	TRIM ACCENT R40
44.	005119	R40E/VHR
45.	005202	SALES & SERVICE (LAM)
46.	002114	HOBBS ELAPSED #20001 SUN
47.	011986	RELAY PLATE R40
48.	002193	RELAY 120V 12AMP T&E
49.	011985	ELEC PANEL R40
50.	002684	RECPT 120V 2086972
51.	002393	BLOWER TRANSFLOW 4C848
52.	042115	LEG FINISHED R40
53.	021507	BAL HAR ASSY TOP R40
54.	002470	CONN LIUID TITE 3/4 FLEX
55.	006126	SPRING 110# 156 WIRE
56.	002682	TERM BLK MARATHON 16POS
57.	021166	TERM BLK ASSY 3POS
58.	002672	TERM BLK MARATHON 32POS
59.	002034	BALLAST 8G1201W
60.	011890	LEG COVER R40
61.	011366	LEG ADJ TOOL
62.	042113	FRONT PLATE R40
63.	006137	FILTER MTL SN1 6 x 29.5
64.	011988	BAL TRAY VHO R40
65.	011987	BAL TRAY HO R40
66.	002035	BALLAST 8G4035W10T
67.	011989	BAL H-FRAME R40
68.	021500	BAL HAR ASSY BTM R40
69.	006125	SPRING 55# 135 WIRE

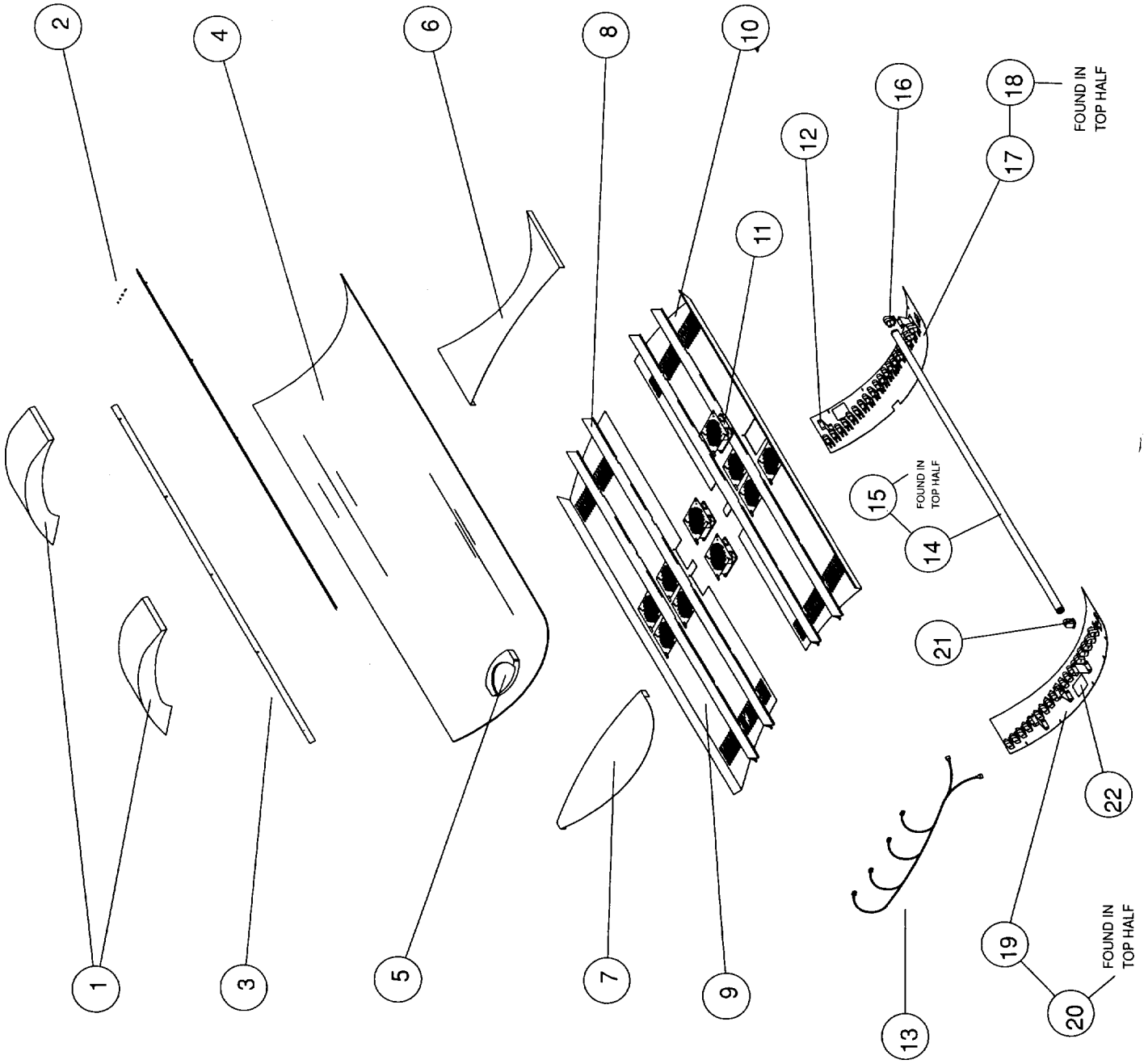
1
2
3
4
5
6
7
8
9
10
11
12
13
14
15
16
17
18
19
20
21
22
FOUND IN TOP HALF
FOUND IN TOP HALF
FOUND IN TOP HALF

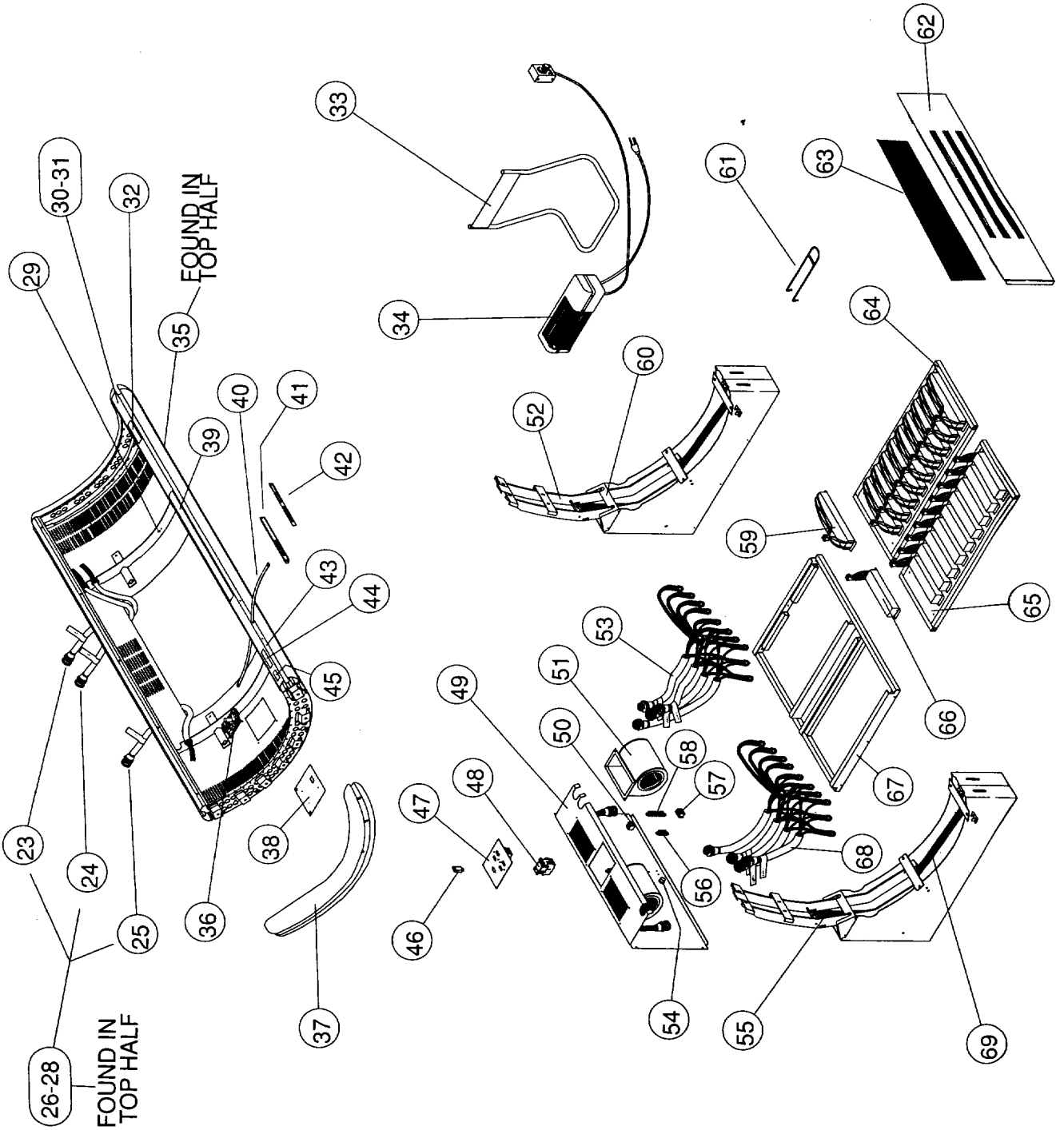
FOUND IN TOP HALF
FOUND IN TOP HALF
23
24
25
26-28
29
30-31
32
33
34
35
36
37
38
39
40
41
42
43
44
45
46
47
48
49
50
51
52
53
54
55
56
57
58
59
60
61
62
63
64
65
66
67
68
69

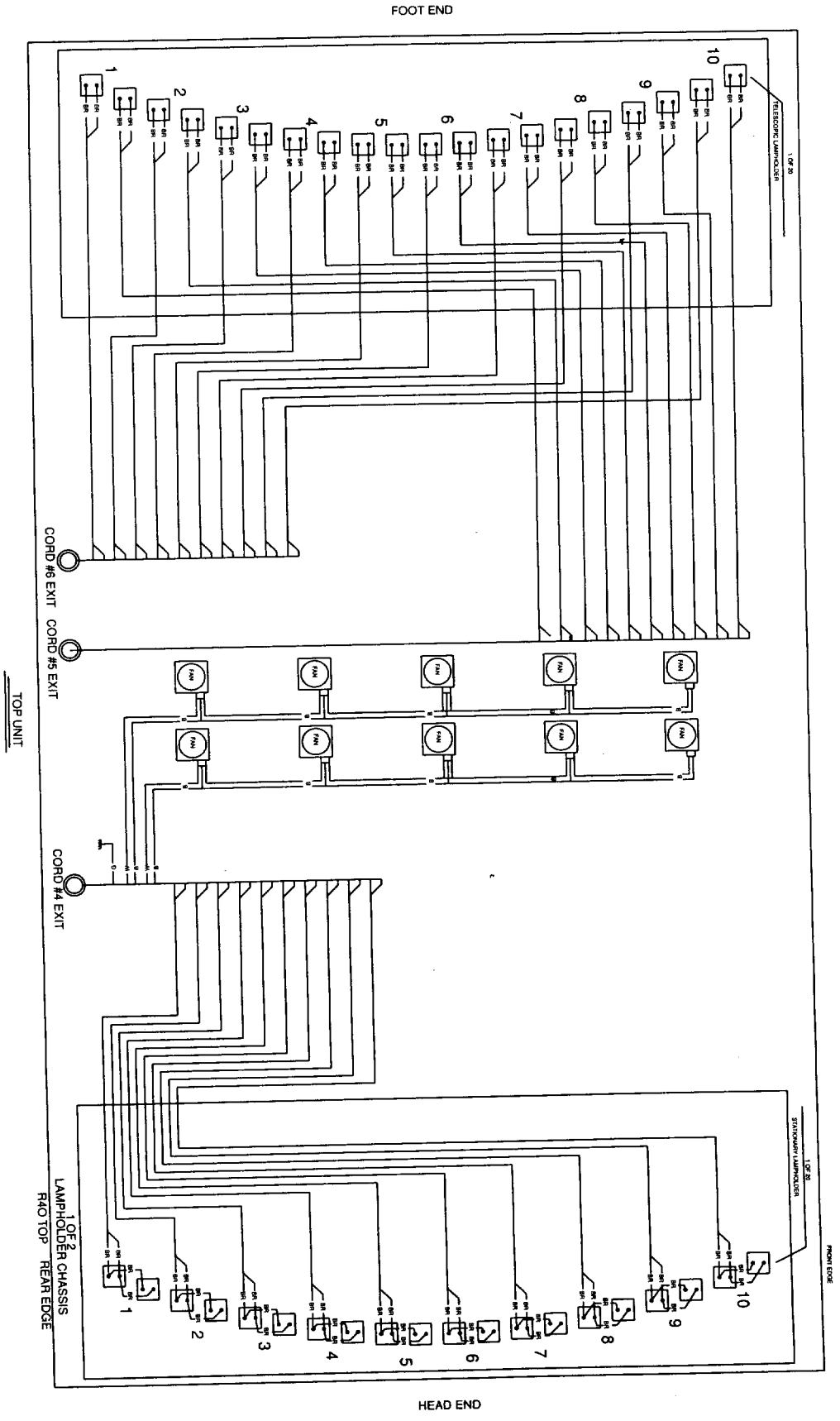
FOOT END
TOP UNIT
CORD #6 EXIT
CORD #5 EXIT
CORD #4 EXIT
TELESCOPIC LAMPHOLDER
1 OF 20
STATIONARY LAMPHOLDER
1 OF 20
1 OF 2
LAMPHOLDER CHASSIS
R40 TOP REAR EDGE
FRONT EDGE
FAN
HEAD END

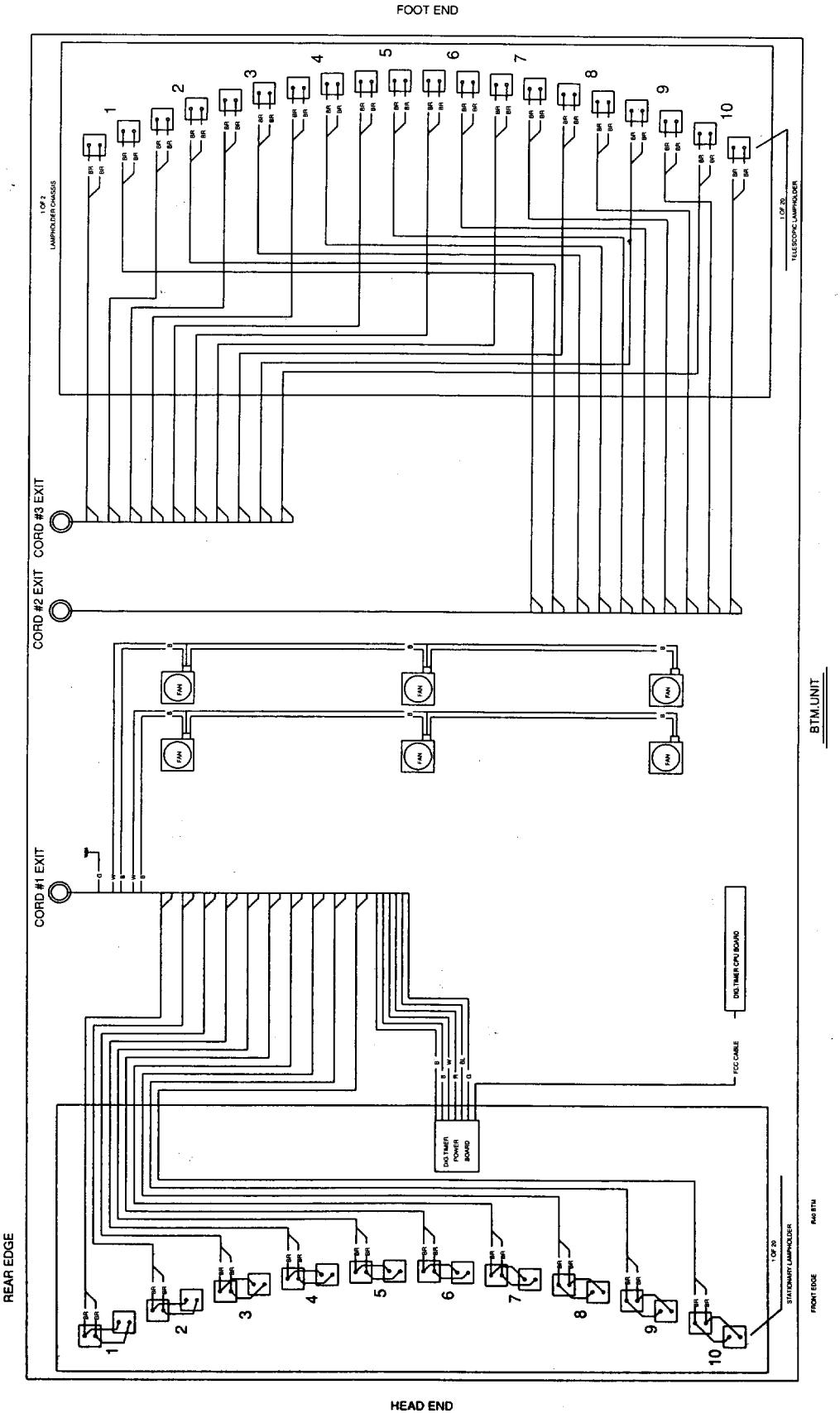
FOOT END
HEAD END
REAR EDGE
CORD #1 EXIT
CORD #2 EXIT
CORD #3 EXIT
BTM.UNIT
DIG.TIMER POWER BOARD
DIG.TIMER CPU BOARD
FCC CABLE
STATIONARY LAMPHOLDER
FRONT EDGE
TELESCOPIC LAMPHOLDER
LAMPHOLDER CHASSIS
FAN

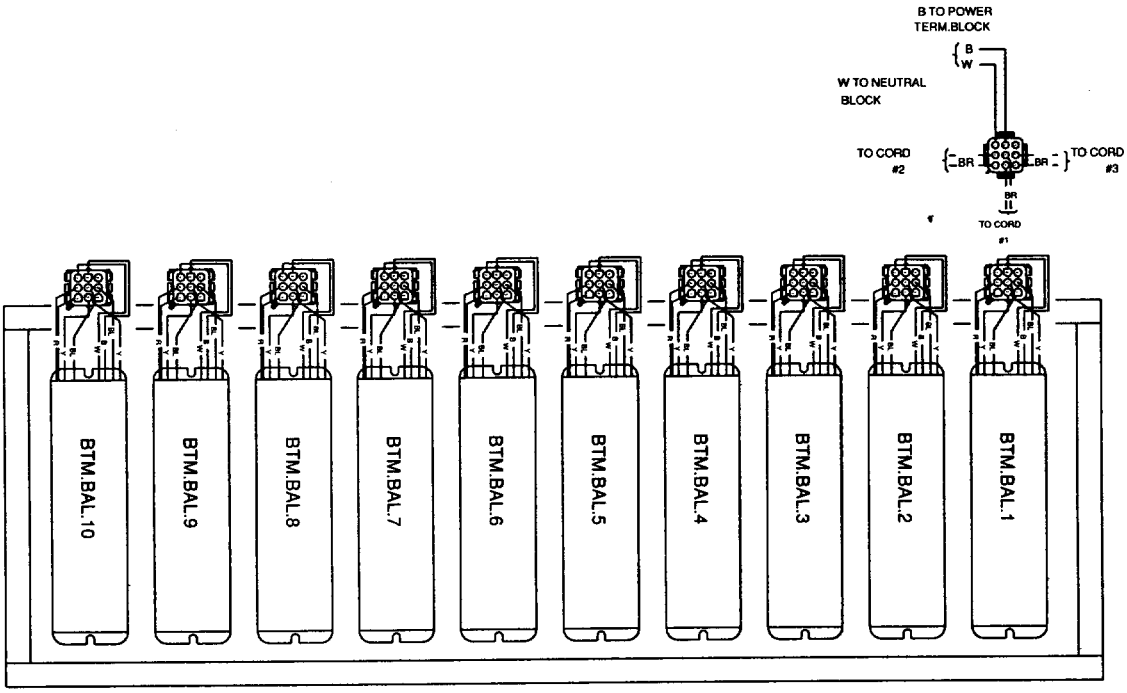

TYP.BALLAST WIRING FOR BTM.BALLAST 1-10.

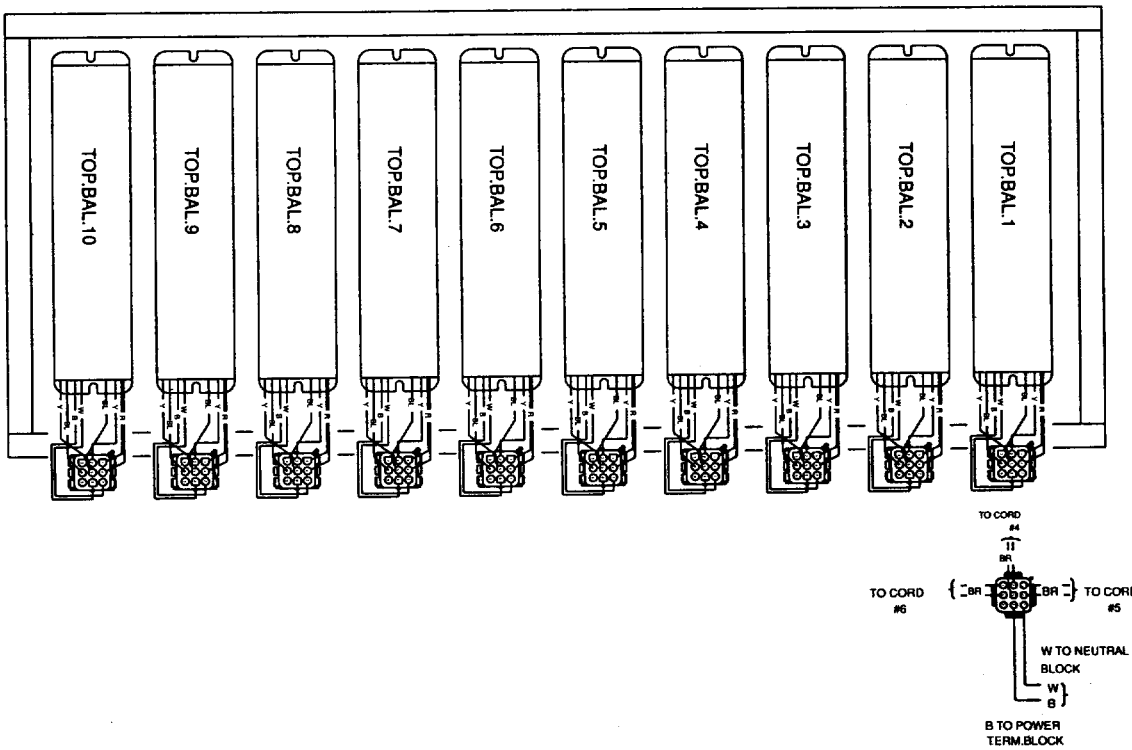

TYP.BALLAST WIRING FOR TOP BALLAST 1-16.

CORD No. 1,2, & 3

PAIR No.	WIRE COLOR	PIN#
1	BROWN	1
1	BROWN	2
2	BROWN	3
2	BROWN	4
3	BROWN	5
3	BROWN	6
4	BROWN	7
4	BROWN	8
5	BROWN	9
5	BROWN	10
6	BROWN	11
6	BROWN	12
7	BROWN	13
7	BROWN	14
8	BROWN	15
8	BROWN	16
9	BROWN	17
9	BROWN	18
10	BROWN	19
10	BROWN	20
TIMER	BLACK	23
TIMER	BROWN	24
TIMER	WHITE	25
TIMER	GREEN	26
TIMER	BLUE	27
TIMER	RED	28
FAN	WHITE	34
FAN	GREEN	35
FAN	BLUE	36

NOTE: CORDS 2 & 3 DON'T HAVE ANY TIMER OR FAN WIRES.

CORD No. 4,5 & 6

PAIR No.	WIRE COLOR
1	BROWN
1	BROWN
2	BROWN
2	BROWN
3	BROWN
3	BROWN
4	BROWN
4	BROWN
5	BROWN
5	BROWN
6	BROWN
6	BROWN
7	BROWN
7	BROWN
8	BROWN
8	BROWN
9	BROWN
9	BROWN
10	BROWN
10	BROWN
FAN	WHITE
FAN	GREEN
FAN	BLUE

NOTE: CORDS 5 & 6 DON'T HAVE ANY FAN WIRES.

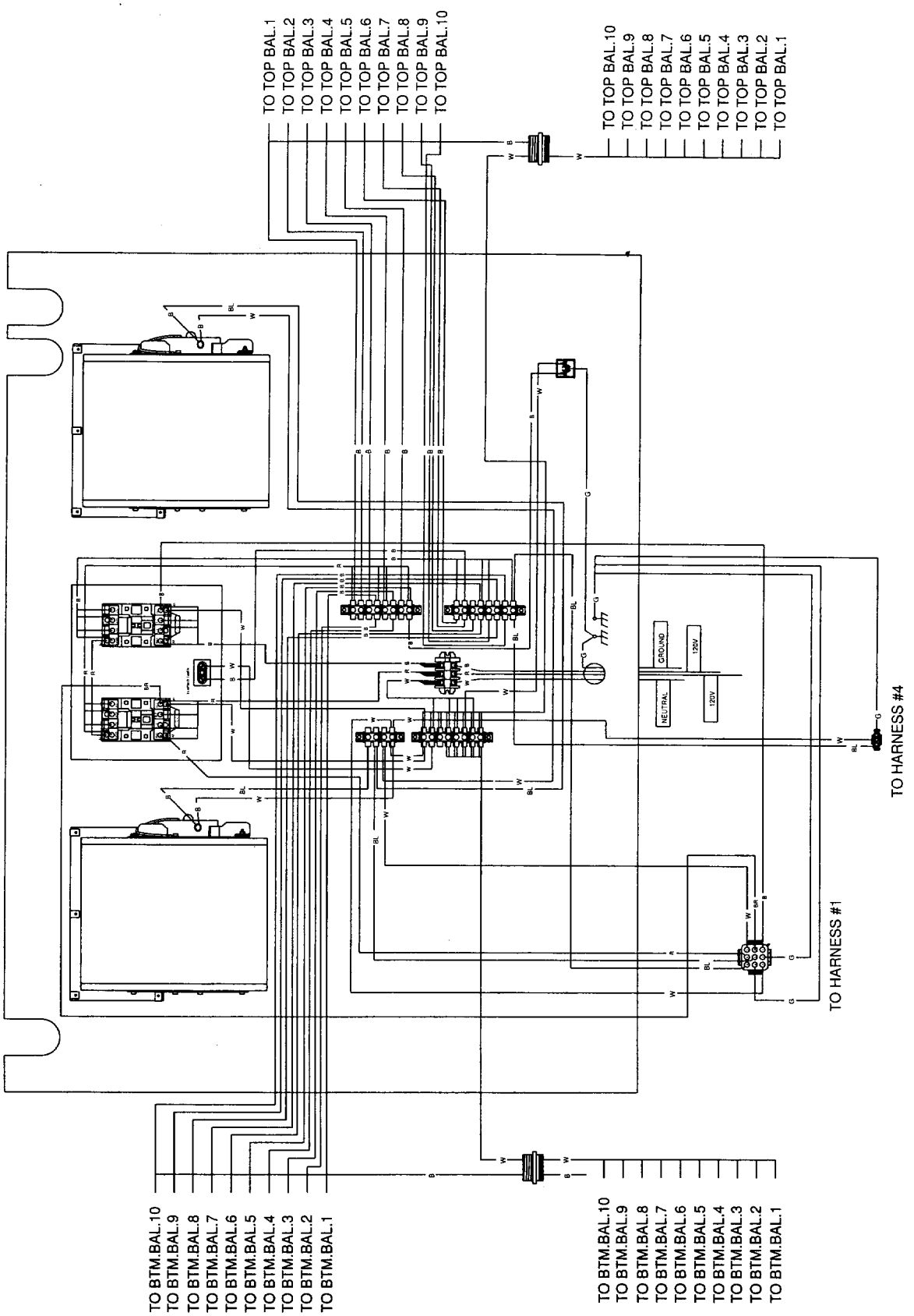
TO TOP BAL.1
TO TOP BAL.2
TO TOP BAL.3
TO TOP BAL.4
TO TOP BAL.5
TO TOP BAL.6
TO TOP BAL.7
TO TOP BAL.8
TO TOP BAL.9
TO TOP BAL.10
TO TOP BAL.10
TO TOP BAL.9
TO TOP BAL.8
TO TOP BAL.7
TO TOP BAL.6
TO TOP BAL.5
TO TOP BAL.4
TO TOP BAL.3
TO TOP BAL.2
TO TOP BAL.1
GROUND
120V
NEUTRAL
120V
TO HARNESS #4
TO HARNESS #1
TO BTM.BAL.10
TO BTM.BAL.9
TO BTM.BAL.8
TO BTM.BAL.7
TO BTM.BAL.6
TO BTM.BAL.5
TO BTM.BAL.4
TO BTM.BAL.3
TO BTM.BAL.2
TO BTM.BAL.1
TO BTM.BAL.10
TO BTM.BAL.9
TO BTM.BAL.8
TO BTM.BAL.7
TO BTM.BAL.6
TO BTM.BAL.5
TO BTM.BAL.4
TO BTM.BAL.3
TO BTM.BAL.2
TO BTM.BAL.1

HARNESS CORD #1

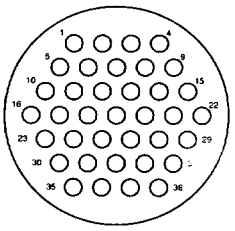

PIN#	COLOR	DESTINATION
1-2	BROWN	TO BAL.1 BTM.
3-4	BROWN	TO BAL.2 BTM.
5-6	BROWN	TO BAL.3 BTM.
7-8	BROWN	TO BAL.4 BTM.
9-10	BROWN	TO BAL.5 BTM.
11-12	BROWN	TO BAL.6 BTM.
13-14	BROWN	TO BAL.7 BTM.
15-16	BROWN	TO BAL.8 BTM.
17-18	BROWN	TO BAL.9 BTM.
19-20	BROWN	TO BAL.10 BTM.
23	BLACK	TO BTM.RELAY POWER
24	BROWN	TO TOP RELAY POWER
25	WHITE	TO NEUTRAL TERM.BLOCK.
26	GREEN	TO GROUND SCREW
27	BLUE	TO FAN TERM.BLOCK
28	RED	TO BTM.RELAY COIL
34	WHITE	TO NEUTRAL TERM.BLOCK.
35	GREEN	TO GROUND SCREW
36	BLUE	TO FAN TERM.BLOCK

HARNESS CORD #2/#3

PIN#	COLOR	DESTINATION
1-2	BROWN	TO BAL.1 BTM.
3-4	BROWN	TO BAL.2 BTM.
5-6	BROWN	TO BAL.3 BTM.
7-8	BROWN	TO BAL.4 BTM.
9-10	BROWN	TO BAL.5 BTM.
11-12	BROWN	TO BAL.6 BTM.
13-14	BROWN	TO BAL.7 BTM.
15-16	BROWN	TO BAL.8 BTM.
17-18	BROWN	TO BAL.9 BTM.
19-20	BROWN	TO BAL.10 BTM.

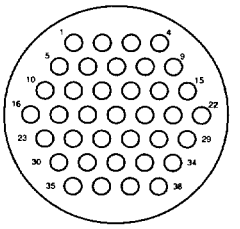

HARNESS CORD #4

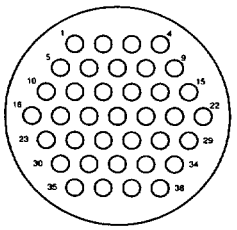

PIN#	COLOR	DESTINATION
1-2	BROWN	TO BAL.1 TOP
3-4	BROWN	TO BAL.2 TOP
5-6	BROWN	TO BAL.3 TOP
7-8	BROWN	TO BAL.4 TOP
9-10	BROWN	TO BAL.5 TOP
11-12	BROWN	TO BAL.6 TOP
13-14	BROWN	TO BAL.7 TOP
15-16	BROWN	TO BAL.8 TOP
17-18	BROWN	TO BAL.9 TOP
19-20	BROWN	TO BAL.10 TOP
34	WHITE	TO NEUTRAL TERM.BLOCK
35	GREEN	TO GROUND SCREW
36	BLUE	TO FAN TERM.BLOCK

HARNESS CORD #5/#6

PIN#	COLOR	DESTINATION
1-2	BROWN	TO BAL.1 TOP
3-4	BROWN	TO BAL.2 TOP
5-6	BROWN	TO BAL.3 TOP
7-8	BROWN	TO BAL.4 TOP
9-10	BROWN	TO BAL.5 TOP
11-12	BROWN	TO BAL.6 TOP
13-14	BROWN	TO BAL.7 TOP
15-16	BROWN	TO BAL.8 TOP
17-18	BROWN	TO BAL.9 TOP
19-20	BROWN	TO BAL.10 TOP

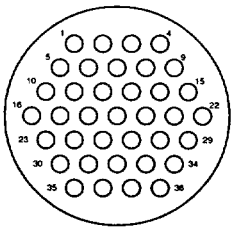

IMPORTANT NOTE

PREVENTIVE MAINTENANCE SCHEDULE

Your SUNDASH Tanning System consists of many movable parts that may require periodic adjustments and/or replacement.

It is imperative that you, the owner and/or operator, check all components for any signs of wear which may occur through normal use.

The frequency of your preventive maintenance schedules should be determined according to equipment usage. The minimum of a monthly inspection of all components is a good guideline, however, actual frequency and thoroughness of inspections is your responsibility.

Should you require any assistance or need additional information, please call our Service Department at **1-800-445-0624**, Monday through Friday 8:00 a.m. -5:00 p.m. CST.

REPAIRS-SERVICE-REPLACEMENT PARTS AND LAMPS-EYE PROTECTION

If you are in need of any of the above mentioned products or services, you should contact the dealer/distributor through whom you purchased your unit. In the event that you are unable to do so, please call our Service Department for assistance at: **1-800-445-0624**.

NOTE: All repairs and replacement components including, but not limited to, protective eyewear, lamps, timers, acrylic and reflectors must be in compliance with CFR 21 1040.20.

ACCESSORY ITEMS

Contact our Merchandising Department to order all your tanning supplies including lotions, moisturizer, accelerators, shower gels, acrylic cleaner and a complete selection of both home and commercial tanning accessories. Call **1-800-235-8555.**

SUN INDUSTRIES, INC.

LIMITED WARRANTY

Sun Industries, Inc. warrants its products to be free from defects in materials and workmanship under intended normal use as described in the unit's Operation and Instruction Manual, for a period of one (1) year from date of sale.

This Limited Warranty applies only to the original purchaser of the equipment through Sun Industries, Inc. or its authorized dealer or distributor, and is not transferable.

Sun Industries, Inc.'s obligations under this warranty are limited to repair or replacement of any defective part without charge for that part to the original purchaser, with the following exceptions:

A. Fluorescent lamps are warranted against defects for a period of thirty (30) days from date of sale.

B. Only parts obtained through Sun Industries, its authorized dealers or distributors may be used. Transportation costs for parts shipped to the consumer and the return of defective parts to Sun Industries are not included.

C. Labor will be furnished without charge for ninety (90) days from date of purchase only. All labor and related charges must be authorized by Sun Industries prior to start of repairs, and must coincide with Sun Industries' established rates and time allotment policy.

D. Acrylic: Refer to Manufacturer's Acrylic Warranty Policy.

It is imperative that the original customer completes and returns the enclosed warranty card within 10 days after purchase to insure valid registration and coverage for potential claims.

If the warranty card is not registered, proof of purchase from Sun Industries, Inc. or its authorized dealer or distributor will be required prior to any consideration on warranty claims. This could result in service delays.

This warranty is extended to the individual or legal entity whose name appears on the warranty registration card filed with Sun Industries, Inc., or whose name appears on the original sales document and may not be transferred to any other individual or legal entity.

This warranty does not apply to any failure of the product, or any parts of the product due to alterations, modifications, misuse, abuse, accident, improper maintenance, improper installation, acts of God or if the serial number on the product has been removed, altered or defaced. Adequate packaging must be use for returned goods to prevent freight damage.

THERE ARE NO WARRANTIES WHICH EXTEND BEYOND THE DESCRIPTION ON THE FACE HEREOF. THERE IS NO EXPRESS OR IMPLIED WARRANTY OF FITNESS OR MERCHANTABILITY.

THE REMEDIES PROVIDED IN THIS LIMITED WARRANTY ARE THE EXCLUSIVE REMEDIES PROVIDED TO THE PURCHASER BY SUN INDUSTRIES, INC. AND ARE PROVIDED IN SUBSTITUTION OF ALL OTHER REMEDIES. CONSEQUENTIAL AND INCIDENTAL DAMAGES ARE EXCLUDED.

No person, firm or corporation is authorized to obligate Sun Industries, Inc. for any liability in connection with the sale or use of these goods.

LIMITED ACRYLIC WARRANTY

Sun Industries, Inc. warrants its acrylic sheets to be free from defects in material and workmanship, under intended normal use, for a period of one (1) year from date of sale of the tanning bed. Due to the tanning lotions, cosmetics, disinfectant and improper cleaners used on tanning surfaces that cannot be controlled by Sun Industries, Inc., after the first thirty (30) days of warranty period, acrylic will be subject to a prorated cost to the consumer on breakage and sizing.

Sun Industries, Inc.'s obligations do not include transportation charges on replacement acrylic.

Sun Industries, Inc. assumes no liability for the cost of removing defective sheets or installing replacement sheets, nor for damage to persons or property.

To make a claim, contact an authorized dealer or distributor of Sun Industries, Inc. or Sun Industries, Inc. Service Department with the model number, the serial number, and the date of purchase of the bed in which the acrylic will be used.

THERE ARE NO WARRANTIES WHICH EXTEND BEYOND THE DESCRIPTION ON THE FACE HEREOF. THERE IS NO EXPRESS OR IMPLIED WARRANTY OF FITNESS OR MERCHANTABILITY.

THE REMEDIES PROVIDED IN THIS LIMITED WARRANTY ARE THE EXCLUSIVE REMEDIES PROVIDED TO THE PURCHASER BY SUN INDUSTRIES, INC. AND ARE PROVIDED IN SUBSTITUTION OF ALL OTHER REMEDIES. CONSEQUENTIAL AND INCIDENTAL DAMAGES ARE EXCLUDED.

Sun Industries, Inc.
P.O. Box 2026
Jonesboro, Arkansas 72402
1-800-445-0624
501-935-1130 (In Arkansas)

WARRANTY CLAIMS POLICIES AND PROCEDURES

SUN INDUSTRIES, INC. FACTORY DIRECT ACCOUNTS

This section on Warranty Claims applies only to units obtained directly through Sun Industries, Inc. or where Warranty Claims must be handled directly through the manufacturer due to mitigating circumstances or where required by law.

PLEASE READ CAREFULLY PRIOR TO CALLING!

To file a Warranty Claim directly through Sun Industries, Inc., the following procedures must be observed.

1. Locate serial number and model number of unit under warranty. This information can be found on the back panel and/or on the leg assembly of the unit.

2. If you have not registered a completed Warranty Card with Sun Industries, Inc., proof of purchase in the form of a paid receipt/invoice, copy of canceled check or credit car statement must be provided before any claim will be considered.

3. Identify and prepare to explain to the best of your ability the problem you are experiencing with the unit.

   NOTE: Consult the trouble shooting guide located in this manual prior to calling. The majority of problems customers experience are actually just basic misinterpretations of operating instructions.

4. If, after observing points 1 through 3, you still require assistance please call our Service Department at 1-800-445-0624 and notify them of your specific concern.

5. Upon identifying the problem, our Service Department will then institute a course of action designed to return unit to working order.

PARTS WARRANTY CLAIMS/CREDIT PROCEDURES

If it is determined that a defective part needs to be replaced, Sun Industries, Inc. will ship the replacement part to the customer freight collect. The customer will be billed on a net 30 basis for the part only.

At this time, the customer will be issued a return authorization (RAN) number. This number will appear on the invoice that will accompany the replacement part.

The customer will, within 15 days of receipt of new part, be required to return the defective part to Sun Industries, Inc. The return authorization invoice (R.A.I.) must accompany the defective part in order to receive credit. A credit invoice offsetting the original bill will be issued upon Sun Industries, Inc.'s receipt of defective part and R.A.I.

NOTE: Sun Industries, Inc.'s obligations are limited to the replacement part only. Freight must be paid by the customer.

WARRANTY CLAIMS POLICY & PROCEDURES

1. When to file a Warranty Claim:

   In the event that your tanning system is not functioning properly under intended normal use as described in the unit's Operation and Instruction Manual, you may then have established cause to file a Warranty Claim.

   NOTE: Both the tanning system and legal registered owner must meet the criteria established under Sun Industries, Inc.'s Limited Warranty as described in this manual before any Warranty Claim will be considered.

2. Where to call to place a Warranty Claim:

   Sun Industries, Inc. is supported nationwide by an extensive dealer/distributor network through whom the majority of our units are sold. These dealers/distributors are required by contract to stock sufficient parts to meet the various warranty and non-warranty needs of their customers.

   Therefore, in order for you to properly file a Warranty Claim, you must locate the name and phone number of the dealer/distributor through whom you purchased your unit. Normally this information can be easily located either on your paid invoice or other proof of purchase documentation that you received when taking delivery of the unit.

   Next, notify the dealer/distributor of the serial number, model number and date unit was purchased. This will initiate the Warranty Claim process.

   Upon determination of the problem, your dealer/distributor can then supply you with the part(s) and proper instructions to return your unit to working order.

   Each dealer/distributor has their own internal procedure for handling Warranty Claims and credits.

   NOTE: Sun Industries, Inc., the manufacturer, does not involve itself in the direct handling of a Warranty Claim except where mitigating circumstances apply and where required by law.

PARTS WARRANTY CLAIM/ CREDIT REVIEW

1. Customer calls Sun Industries, Inc. and notifies the Service Department of problem.

2. Sun Industries, Inc.'s Service Department determines course of action.

3. Sun Industries, Inc. ships part and R.A.I. to customer freight collect and bills customer on net 30 basis for part only.

4. Customer, within 15 days of receiving new part, returns defective part to Sun Industries, Inc. along with R.A.I.

5. Upon receipt of defective part and R.A.I., Sun Industries, Inc. issues customer a credit invoice which offsets original bill. Customer's account is returned to zero balance concerning this claim.

NOTE: If part returned to Sun Industries, Inc. proves to be operational and not defective, or if product code numbers on part do not correspond with individual unit date on file with Sun Industries, Inc., then a 30% restocking fee will be charged in addition to the retail purchase price of part.

Acknowledgement of the Agreement is not required for acceptance of the foregoing stipulations.

LABOR WARRANTY CLAIM/CREDIT PROCEDURES

Sun Industries, Inc. furnishes labor without charge for a period of 90 days from date of purchase. All labor and related charges must be authorized by Sun Industries, Inc. **prior** to start or repairs, and must coincide with Sun Industries, Inc.'s established rates and time allotment policy.

Please contact our Service Department for authorization and billing procedures.

Limited Lifetime Warranty

Sun Industries, Inc. warrants specific individual components of the R-26P, R-32P, R-26B, R-32B, R-40SS, SR-48, 416SL and 424SL tanning systems against defects in materials and workmanship for the life of the product. Coverage is limited to units purchased after November 1, 1994.

This warranty is restricted by the following components only:

Steel Back Panels
Structural Steel Frame Components
Aluminum Extruded Rails
Exterior Steel Body

NOTE: Components are warranted on an individual basis and not as they may effect the complete product.

Warranty coverage does not include cosmetic abnormalities such as scratches, nicks, dents, oxidation of paint or other cosmetic changes that do not interfere with the designed function of the unit.

This warranty does not include failure of the product due to alteration, modifications, misuse, abuse improper, maintenance, improper installation or repair.

This warranty is not transferable and is only applicable to the original purchaser named on a completed and registered warranty record at Sun Industries, Inc. headquarters.

Sun Industries, Inc. obligations do not include transportation charged on the shipping of new components to the customer or on the return of defective components of the manufacturer. All freight charges must be paid by the customer.

THERE ARE NO WARRANTIES WHICH EXTEND BEYOND THE DESCRIPTION ON THE FACE HEREOF. THERE IS NO EXPRESS OR IMPLIED WARRANTY OF FITNESS OR MERCHANTABILITY.

THE REMEDIES PROVIDED IN THIS LIMITED WARRANTY ARE THE EXCLUSIVE REMEDIES PROVIDED TO THE PURCHASER BY SUN INDUSTRIES, INC. AND ARE PROVIDED IN SUBSTITUTION OF ALL OTHER REMEDIES - CONSEQUENTIAL AND INCIDENTAL DAMAGES ARE EXCLUDED.